Source Four® Zoom

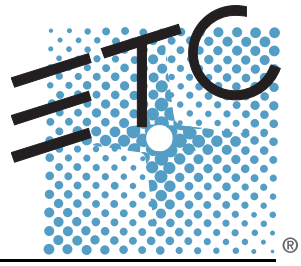

User Manual

Production Dates: September 2004 - Present

Copyright © Electronic 2013 Theatre Controls, Inc.
All Rights reserved.
Product information and specifications subject to change.
Part Number: **7060M1250-06.01** Rev D
Released: September 2013

Picking# 7060M1008-D

Table of Contents

Basic Assembly 1
Fixture information 2
Color frame holder 3

Replacing the HPL Lamp 4

Adjustments 5
Centering lamp and adjusting the field 5
Selecting the field angle and focusing the beam 5
Shaping the beam 6
Rotating the barrel assembly 7
Adjusting the C-clamp 7
Adjusting the yoke position — 25°-50° Zoom 8
Adjusting the optional balance yoke position — 15°-30° Zoom . . 9

Cleaning Lens and Reflector 10
Cleaning glass lens 10
Cleaning the reflector 11

ETC®, Emphasis®, Expression®, Insight™, Imagine™, Focus™, Express™, Unison®, Obsession® II, ETCNet2™, EDMX™, Source Four®, Revolution®, Sensor®, and WYSILink™ are either registered trademarks or trademarks of Electronic Theatre Controls, Inc. in the United States and other countries.

All other trademarks, both marked and not marked, are the property of their respective owners.

Basic Assembly

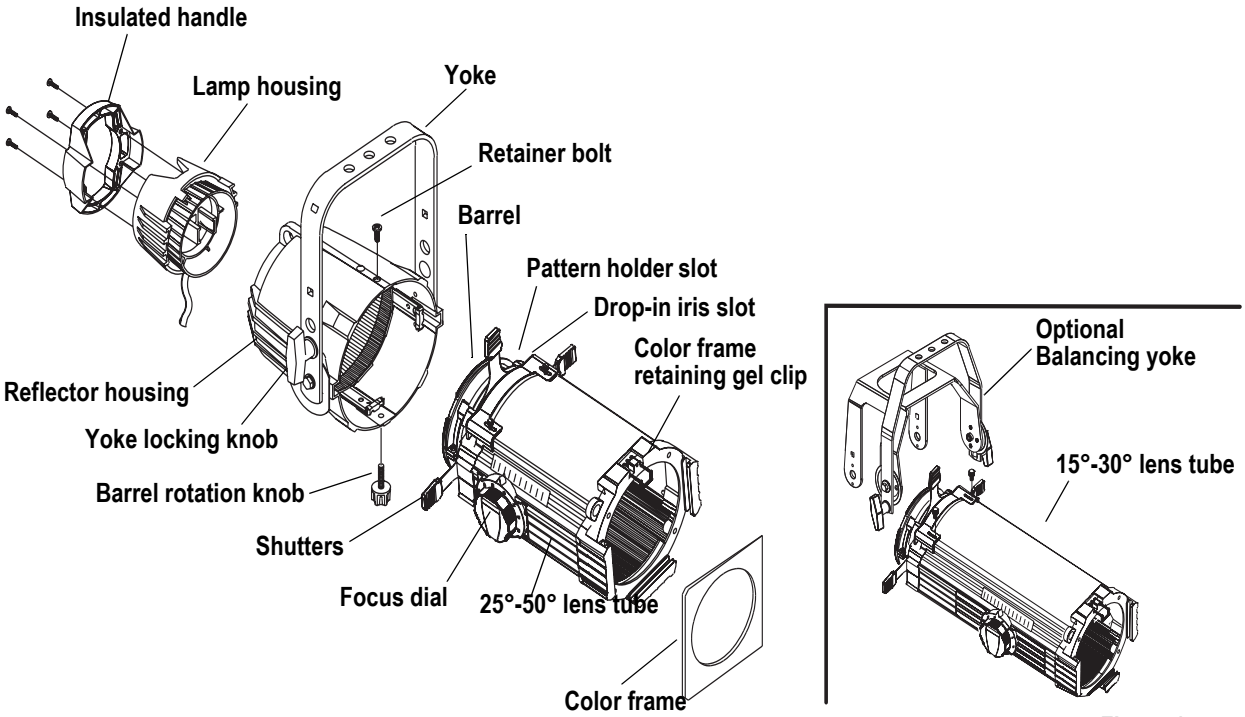

Figure 1

WARNING: ***Please note the following safety warnings before use:***

Do not mount the fixture on or near combustible surfaces.

Do not operate the fixture without a lens installed.

Always hang the fixture with the color frame retaining clip in the locked position.

Remove cardboard insert from lens tube before connecting power to your fixture.

Fixture information

HPL lamp table

CAUTION: Do not use lamps other than the HPL in Source Four fixtures. ***Use of lamps other than HPL will void UL/cUL safety compliance and your warranty.***

Lamp code	Watts	Volts	Initial Lumen	Color temp.	Average rated life
HPL 780/77*	750	77	22,950	3,250°	300 hours
HPL 550/77*	550	77	16,170	3,250°	300 hours
HPL 550/77X*	550	77	12,160	3,050°	2000 hours
HPL 750/115	750	115	21,900	3,250°K	300 hours
HPL 750/115X	750	115	16,400	3,050°	1500 hours
HPL 575/115	575	115	16,520	3,250°K	300 hours
HPL 575/115X	575	115	12,360	3,050°K	2000 hours
HPL 375/115	375	115	10,540	3,250°K	300 hours
HPL 375/115X	375	115	8,000	3,050°K	1000 hours
HPL 750/120	750	120	21,900	3,250°K	300 hours
HPL 750/120X	750	130	16,400	3,500°K	1500 hours
HPL 575/120	575	120	16,520	3,250°K	300 hours
HPL 575/120X	575	120	12,360	3,050°K	2000 hours
HPL 750/230	750	230	19,750	3,200°K	300 hours
HPL 750/230X	750	230	15,600	3,050°K	1500 hours
HPL 575/230	575	230	14,900	3,200°K	400 hours
HPL 575/230X	575	230	11,780	3,050°K	1500 hours
HPL 375/230X	375	230	7,250	3,000°K	1000 hours
HPL 750/240	750	240	19,750	3,200°K	300 hours
HPL 750/240X	750	240	15,600	3,050°K	1500 hours
HPL 575/240	575	240	14,900	3,050°K	400 hours
HPL 575/240X	575	240	11,780	3,050°K	1500 hours
HPL 375/240X	375	240	7,250	3,000°K	1000 hours
* To be used with ETC Dimmer Doubler™					

Color frame holder

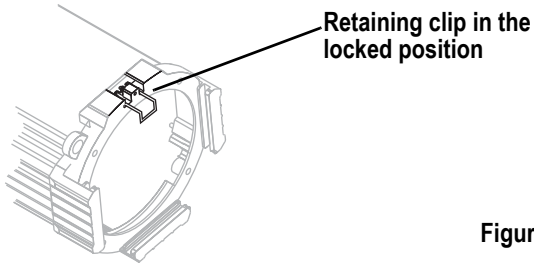

Figure 2

The color frame holder is equipped with a spring-loaded retaining clip that prevents color frames and accessories from falling out. See *Figure 2*.

WARNING: ***Make sure all color frame accessories are locked in position with the retaining clip before hanging the Source Four.***

Step 1: Release the retaining clip by pushing it sideways while gently pulling backwards.

Step 2: Insert the color frame.

Step 3: Lock the retaining clip by pushing sideways while gently pushing forward.

Note: *The performance of saturated colors may be less than desirable in any theatrical lighting fixture, especially when equipped with a 750w lamp. For best results, always use high-quality color media rated for high-temperature use.*

ETC's optional Gel Extender, part # PSF1029, will provide maximum color media life. The use of any gel extender accessory may limit the coverage of any wide-angle lens or beam setting.

A variety of heat shield products is also available from many color media manufacturers. Follow the manufacturer's instructions for the use of these products.

Replacing the HPL Lamp

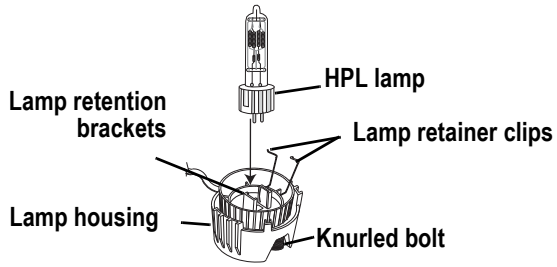

Figure 3

A lamp must be installed before you use the fixture.

Note: *Verify that the HPL lamp you intend to install is suitable for your facility's voltage; 115-, 120-, 230-, and 240-volt HPL lamps are available. See Fixture information, page 2. Operating HPL lamps above their rated voltage reduces lamp life and can cause premature lamp failure.*

WARNING: ***Let the lamp cool before replacing.***

Step 1: Disconnect power to the Source Four before installing the lamp.

Step 2: Loosen the knurled bolt on the back of the lamp housing and pull the housing out.

Step 3: Holding by the base, remove the HPL lamp from its box.

CAUTION: *Use caution when installing or replacing any lamp.*

When installing/replacing lamp, be sure to point the lamp away from your face and away from others before inserting it firmly into the assembly.

This may prevent injuries if the lamp should break.

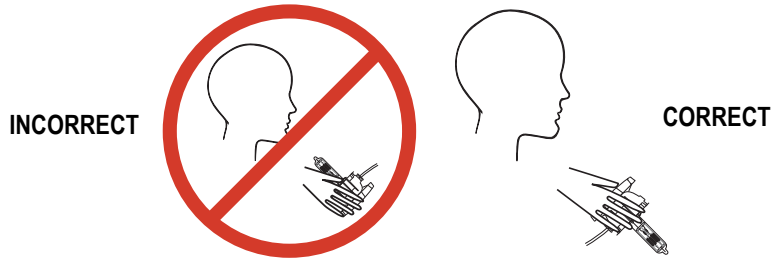

Note: *To avoid premature lamp failure, do not touch the lamp glass. If you do, clean it carefully with isopropyl alcohol and a clean lint-free cloth. Allow to dry before operation.*

Step 4: Align the flat sides of the lamp base with the retention brackets on either side of the socket as shown in *Figure 3*.

Step 5: Push down on the lamp base until the lamp seats firmly. When properly installed, the top of the lamp's base will be even with he top edges of the retention brackets.

CAUTION: *Improperly installed lamps cause premature lamp failure and socket problems.*

Step 6: Press lamp retaining clip across lamp base to secure.

Step 7: Reinstall the lamp housing by aligning the bolt hole and tightening the knurled bolt.

Centering lamp and adjusting the field

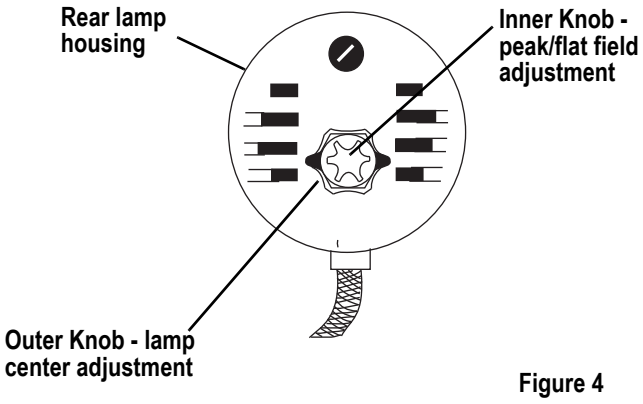

Figure 4

Figure 5

The two concentric knobs located on the lamp housing allow you to align the lamp and adjust its field. See *Figure 4*. The outer knob centers the lamp within the reflector. The inner knob adjusts the lamp's field.

Step 1: Turn on the Source Four and aim it at a flat surface. Adjust the barrel to create a hard edge.

Step 2: Unlock and loosen the outer knob by turning it counterclockwise.

Step 3: Gently move the outer knob from side to side and up and down until the lamp is centered within the reflector.

Step 4: Once the lamp is centered, turn the outer knob clockwise to lock it in place.

Step 5: Finally, turn the inner knob either clockwise or counterclockwise to achieve an optimum flat field. See *Figure 5*.

Selecting the field angle and focusing the beam

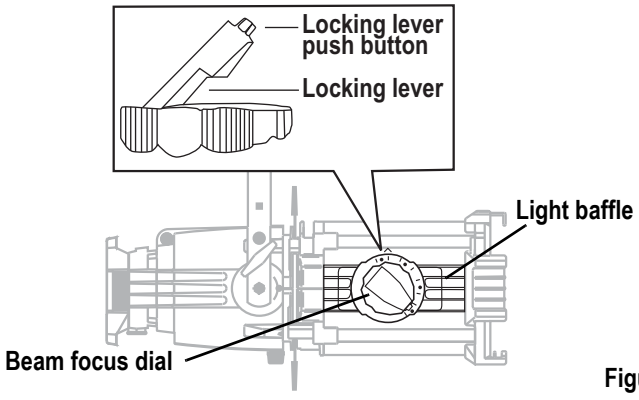

Figure 6

Step 1: Press the locking lever push button and lift the locking lever to unlock the focus dial as shown in *Figure 6*.

Step 2: To reduce the field angle, rotate the focus dial clockwise. To enlarge the field, rotate the dial counterclockwise.

Step 3: Once the desired field angle is established, slide the light baffle forward to soften or backward to sharpen the edge.

Step 4: Once the field and edge are established, press the locking lever to lock the focus dial into position.

Shaping the beam

The beam can be shaped using the shutters (see *Figure 1*), a pattern, an optional drop-in iris, or by rotating the barrel.

Pattern Projection

The pattern holder slot is on the top side of the barrel and in front of the shutters. It accommodates **A-size, B-size** and glass pattern holders (see *Figure 7*).

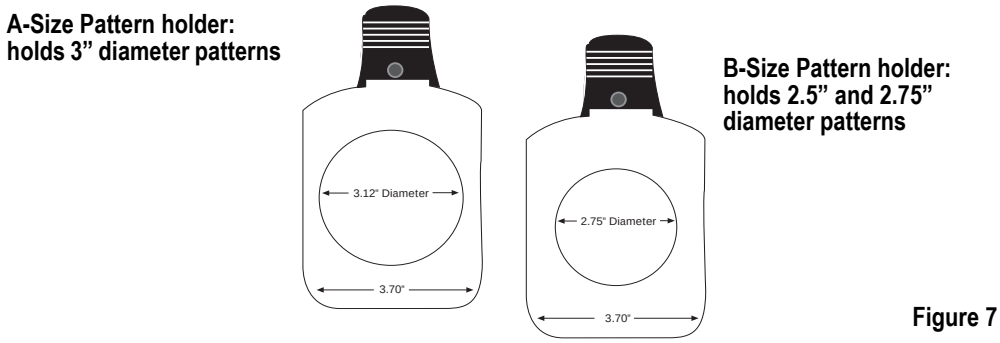

Figure 7

Note: *Because the Source Four aperture is 3 inches wide, ETC recommends using A-size patterns for maximum pattern effectiveness.*

Use an optional donut in the accessory holder to enhance pattern projection. Donut diameter range should be 2.5” to 2.75”.

Drop-In Iris Slot

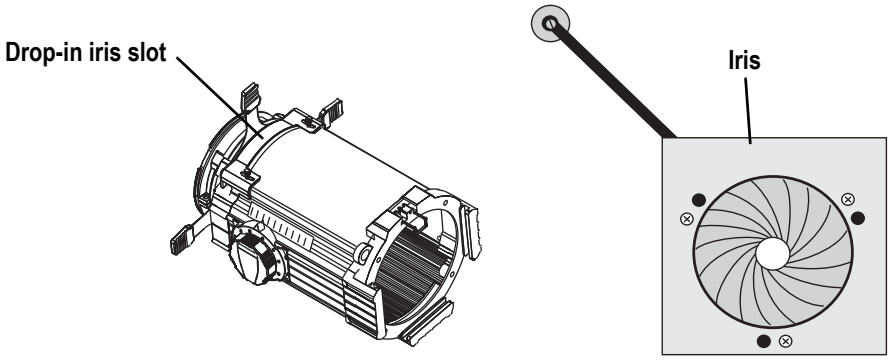

Figure 8

The drop-in iris slot is located on the top of the barrel and in front of the pattern holder slot. It accommodates either a drop-in iris or a motorized pattern device. When the slot is not in use, a small sheet metal cover secured with two Phillips screws prevents light leakage (see *Figure 8*).

Step 1: Use a screwdriver to loosen the screws on the drop-in iris slot cover. **Do not remove thumbscrews**.

Step 2: Slide the cover completely forward to expose the slot.

Step 3: Insert the iris or motorized pattern device. For an iris, install the flat side toward the shutters and make sure the iris handle extends from the slot.

Step 4: Slide the slot cover back toward the shutters until it meets the iris handle. Leave enough space to move the iris handle.

Step 5: Secure the drop-in iris slot cover by tightening the screws.

Rotating the barrel assembly

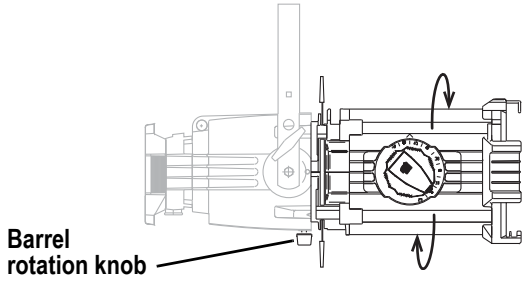

Figure 9

Step 1: Loosen the barrel rotation knob directly behind the shutters on the underside of the reflector housing (see *Figure 9*). **Do not** remove the barrel rotation knob.

Step 2: Rotate the barrel to the desired position (up to 25° in either direction from the centered position).

Step 3: Once the barrel is positioned, tighten the barrel's rotation knob to lock it in place.

Adjusting the C-clamp

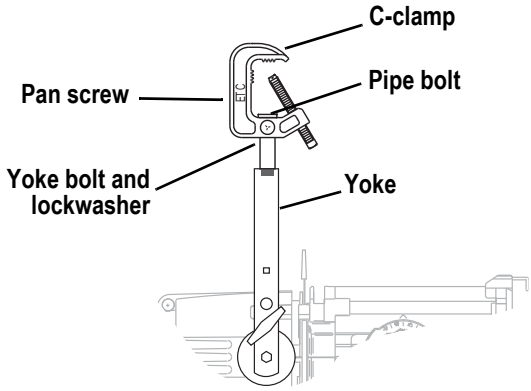

Figure 10

The C-clamp attaches the fixture to the mounting pipe and allows you to adjust the position of the fixture once it is mounted (see *Figure 10*).

Step 1: Tightly fasten the C-clamp to the yoke with the provided yoke bolt and lock washer.

Step 2: Place the C-clamp on mounting pipe, then tighten the pipe bolt to secure it.

Step 3: Loosen the C-clamp pan screw and rotate the yoke to the desired position.

Step 4: Tighten the pan screw to lock the fixture.

CAUTION: *Tighten C-clamp pipe bolt to 15-20 ft./lbs. (approximately finger tight plus up to one-quarter turn). Do not exceed 25 ft./lbs. Do not use excessive force.*

Tighten the yoke pivot bolt to 5-10 ft./lbs. (approximately finger tight plus up to one-eighth turn). Do not exceed 15 ft./lbs. Do not use excessive force.

Adjusting the yoke position — 25°-50° Zoom

The Source Four 25°-50° Zoom provides multi-positioning capabilities within its yoke for overall fixture height and angle.

Setting the fixture height within the yoke

The Source Four 25°-50° Zoom has a two-position yoke for modifying the overall height in which the fixture is mounted (see *Figure 11*). To change the height position, perform the following steps.

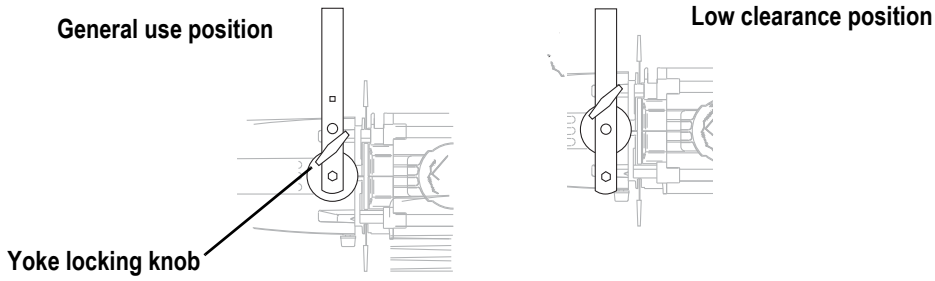

Figure 11

Step 1: Remove the yoke locking knobs, washers, and hex bolts from either side of the fixture.

Step 2: Raise or lower the fixture to the desired position within the yoke.

Step 3: Reinstall the yoke's hex bolts, washers, and locking knobs.

Step 4: Tighten the yoke knobs to secure in position.

Setting the angle within the yoke

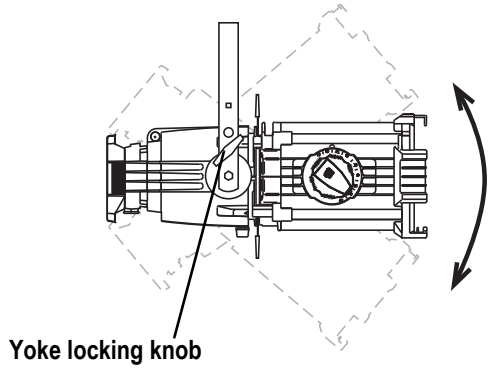

Figure 12

Step 1: Loosen the yoke locking knobs (see *Figure 12*). **Do not** remove them.

Step 2: Tilt the fixture to the desired position.

Step 3: Tighten the yoke locking knobs to secure in position.

Adjusting the optional balance yoke position — 15°-30° Zoom

The Source Four 15°-30° Zoom has an optional balance yoke bracket (ETC part # 7060A2028) for repositioning the fixture's center of gravity. It is also equipped with a moveable yoke for setting the fixture's angle.

Setting the balance yoke

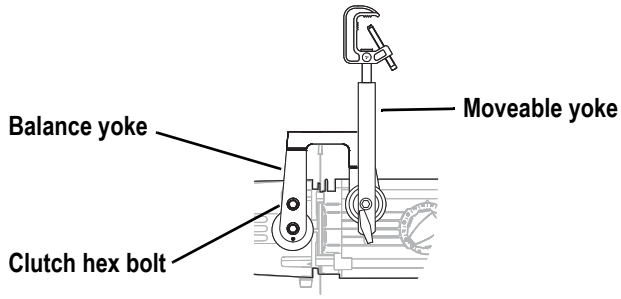

Figure 13

Step 1: Loosen the balance yoke's clutch hex bolts on either side of the fixture.

Step 2: Adjust the balance yoke so it is perpendicular to the fixture as shown in *Figure 13*. If front of the fixture has several accessories attached, you may need to tilt the balance yoke towards the front of the fixture to adjust the balance.

Step 3: Tighten the balance yoke's clutch hex bolts to secure the yoke into position.

CAUTION: *Once the balance yoke is locked, adjustments should only be made to the moveable yoke.*

Setting the angle within the moveable yoke

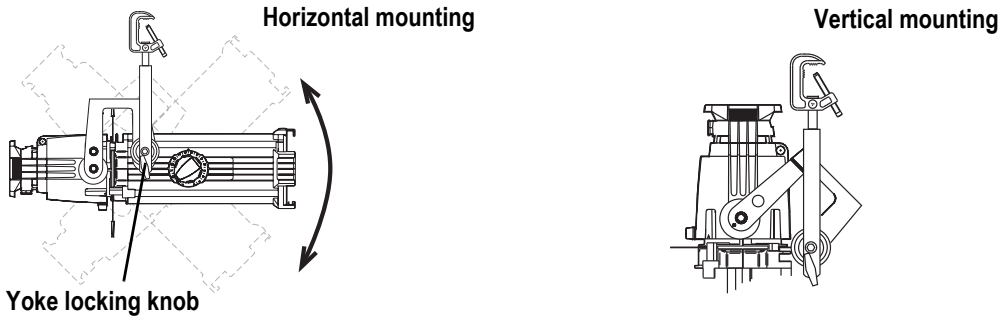

Figure 14

Step 1: Loosen the moveable yoke's locking knobs. Do not remove them.

Step 2: Tilt the fixture to the desired position as shown in *Figure 14*.

Step 3: Tighten the yoke's locking knobs to secure the fixture in position.

Cleaning Lens and Reflector

WARNING: ***Do not use ammonia-based or other harsh commercial cleaners. Clean lens and reflector only as directed.***

Commercially available glass cleaning agents should be avoided as they may contain ammonia, other harsh chemical detergents or abrasive agents. These cleaners may damage the glass surface and the Anti-Reflective coatings. Do not immerse or soak the glass in any cleaning solution.

Replace lenses if they contain visible damage (cracks or deep scratches) that may impair their effectiveness.

Cleaning glass lens

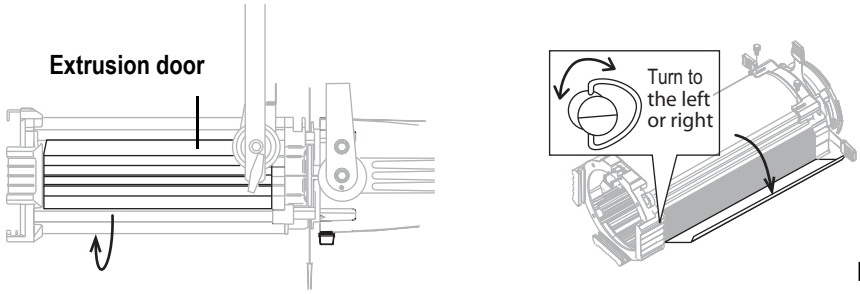

Figure 15

Note: *To clean the 15°-30° Zoom, rotate the lens tube to its limit in one direction (approximately 25°) so the extrusion door will clear the balance yoke. See Figure 15.*

Step 1: Rotate the extrusion door fastener 1/4 turn to the right or left and open extrusion door.

Step 2: Set the lens to the narrowest field angle to maximize the distance between the lenses.

Step 3: Remove dust with a blast of oil-free air or wipe with a clean, lint-free cloth. Isopropyl alcohol, distilled water or a 50%-50% mixture of each can be used to clean the glass surface.

Step 4: Close the extrusion door and turn the fastener 1/4 turn to secure it.

Cleaning the reflector

WARNING: ***Unplug the fixture before attempting to clean the reflector.***

To quickly clean the reflector, remove the lens tube and clean the dust from the reflector with a blast of oil-free air. You may also wipe the reflector with a clean lint-free cloth. If either method is not sufficient, follow these steps.

Step 1: To protect the lamp housing during cleaning, remove the lamp housing by loosening the knurled bolt and pulling the housing straight out. See *Figure 3*.

Step 2: Remove the barrel rotation knob located at the bottom of the barrel (see *Figure 1*). Use a Phillips screwdriver to remove the retainer bolt located on top of the reflector housing.

Step 3: Rotate the barrel 45° in either direction. Carefully remove the barrel from the reflector housing.

Step 4: Remove dust with a blast of oil-free air or wipe with a clean, lint-free cloth. Isopropyl alcohol, distilled water or a 50%-50% mixture of each can be used to clean the glass surface.

Step 5: Gently wipe the reflector.

Step 6: Insert the barrel into the reflector housing with the iris/pattern slot on top. Align the triangles on both parts.

Step 7: While gently pressing in, rotate the barrel 45° clockwise until it sets into position, then rotate the barrel counterclockwise 45°. The barrel should be firmly attached and the triangles should be aligned.

Step 8: Reinstall the barrel rotation knob and tighten the retainer bolt.

Step 9: Reinstall the lamp housing and tighten the knurled bolt.

Corporate Headquarters ■ 3031 Pleasant View Road, P.O. Box 620979, Middleton, Wisconsin 53562-0979 USA ■ Tel +608 831 4116 ■ Fax +608 836 1736
London, UK ■ Unit 26-28, Victoria Industrial Estate, Victoria Road, London W3 6UU, UK ■ Tel +44 (0)20 8896 1000 ■ Fax +44 (0)20 8896 2000
Rome, IT ■ Via Pieve Torina, 48, 00156 Rome, Italy ■ Tel +39 (06) 32 111 683 ■ Fax +39 (06) 32 656 990
Holzkirchen, DE ■ Ohmstrasse 3, 83607 Holzkirchen, Germany ■ Tel +49 (80 24) 47 00-0 ■ Fax +49 (80 24) 47 00-3 00
Hong Kong ■ Rm 1801, 18/F, Tower 1 Phase 1, Enterprise Square, 9 Sheung Yuet Road, Kowloon Bay, Kowloon, Hong Kong ■ Tel +852 2799 1220 ■ Fax +852 2799 9325
Service: (Americas) service@etcconnect.com ■ (UK) service@etceurope.com ■ (DE) techserv-hoki@etcconnect.com ■ (Asia) service@etcasia.com
Web: www.etcconnect.com ■ Copyright © 2013 ETC. All Rights Reserved. ■ Product information and specifications subject to change.
7060M1250-06.01 ■ Rev D ■ Released 2013-09